RC Procedure 2017_039

Feb 16th

2017

[This procedure describes about the how to adjust the AWF rodless Cylinder UP and Down Movement Speed.
If speed is not as per recommendation tank cutting wire will get stuck in between the **Pipe Tip nozzle and upper guide** while threading (M60) and AWF cycle will not complete.
(This is applicable for Alpha C iA onwards series model machines)]

[AWF Unit Rodless Cylinder Speed Adjustment]

Note:
"Video of AWF cycle and stored in Service Knowledge base location (FAST folder) for better understanding"

Procedure of Adjusting the Speed of the Rodless Cylinder:-

General Cautions

a. Safety first.

b. Special care is need for handling any parts.

c. Mark on the any parts for assembling in the original position and direction when disassembling.

Required tools

- General working tools.
    1. Screw Drivers
    2. Allen Key Sets
    3. Wire Cutter

Working Procedure

AWF Unit:

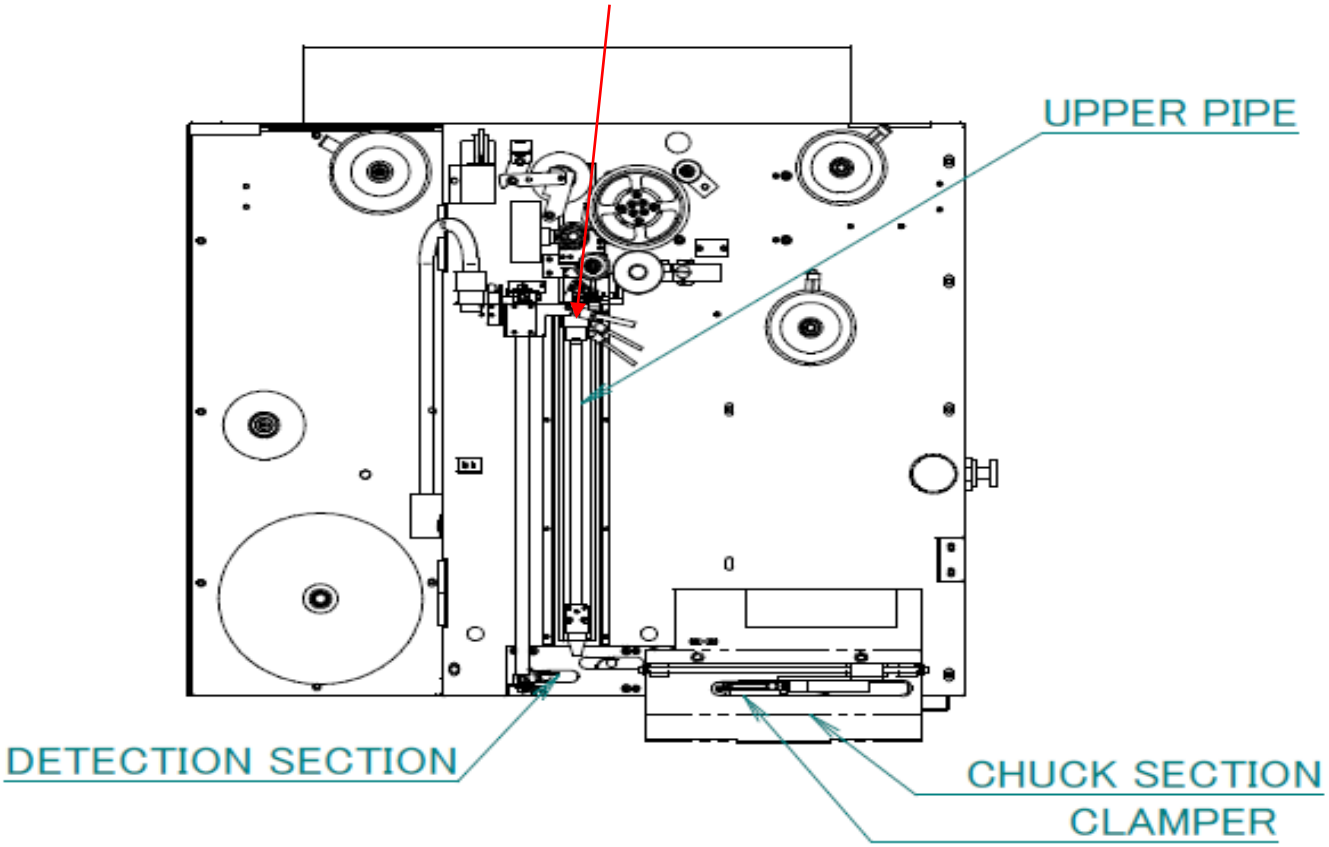

1. Understnding of the Problem Phenomena: AWF Wire threading (M60) is not completed and wire is getting stuck in Upper giude(Unbale to insert the wire ifrom Top of the Upper guide it self!).

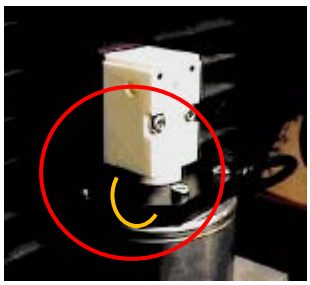

2. Above phenomena is confirmed that wire is coming out from the Pipe Tip Nozzle before Pipe stops at Upper guide.

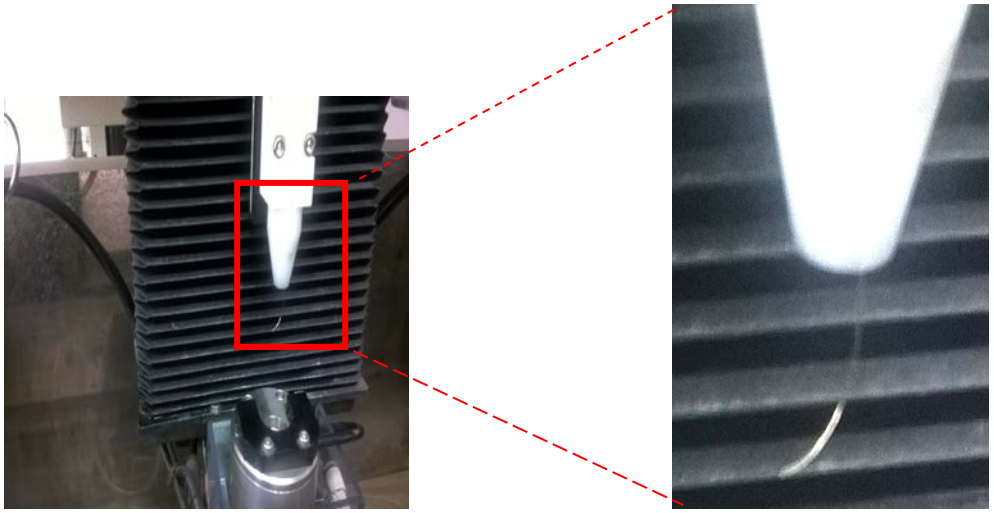

3. When Threading cycles starts Wire feed will begain at the same time pipe alos start moving downwards. Whole this operation will happen simentaneously, so any delay in pipe down operation which will lead the this type of phenomena. And AWF cycle will not complete.

4. So, We understood this type of problem phenomena. How to ensure pipe Up and Down speed is okay and what is the recomneded value. Please find below chart.

Adjusting the Speed for Downward movement		
Alpha- C400iA	2.5 Sec.	Upper guide 150 mm below the Top
Alpha- C600iA-(Z300)	2.5 Sec.	Upper guide 170 mm below the Top
Alpha- C600iA-(Z400)	2.5 Sec.	Upper guide 170 mm below the Top
Adjusting the Speed for Upword movement		
Alpha- C400iA	2.5 Sec.	Upper guide 150 mm below the Top
Alpha- C600iA-(Z300)	2.5 Sec.	Upper guide 170 mm below the Top
Alpha- C600iA-(Z400)	2.5 Sec.	Upper guide 170 mm below the Top

5. Above values can achived by by adjusting the flow control valve shown as below.

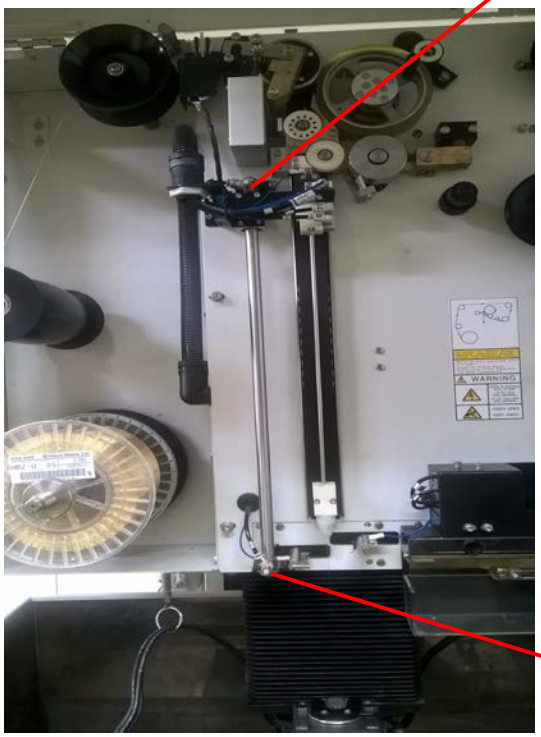

Adjusting the Speed for Upward movement:
To adjust the speed, use speed controller at upper end of the cylinder as per above-mentioned table (And ensure that speed it matches the wire winding speed. If the wire speed is high wire will get bent and caught between cylinder and break shoe.

Adjusting the Speed for Downward movement:
To adjust the speed, use speed controller at lower end of the cylinder as per above-mentioned table (And ensure that speed so that it is slightly faster than brake- roller rotation for downward movement.

6. Note: Cylinder Air Pressure – 0.5 MPa

"Video of AWF cycle and stored in Service Knowledge base location (FAST folder) for better understanding"